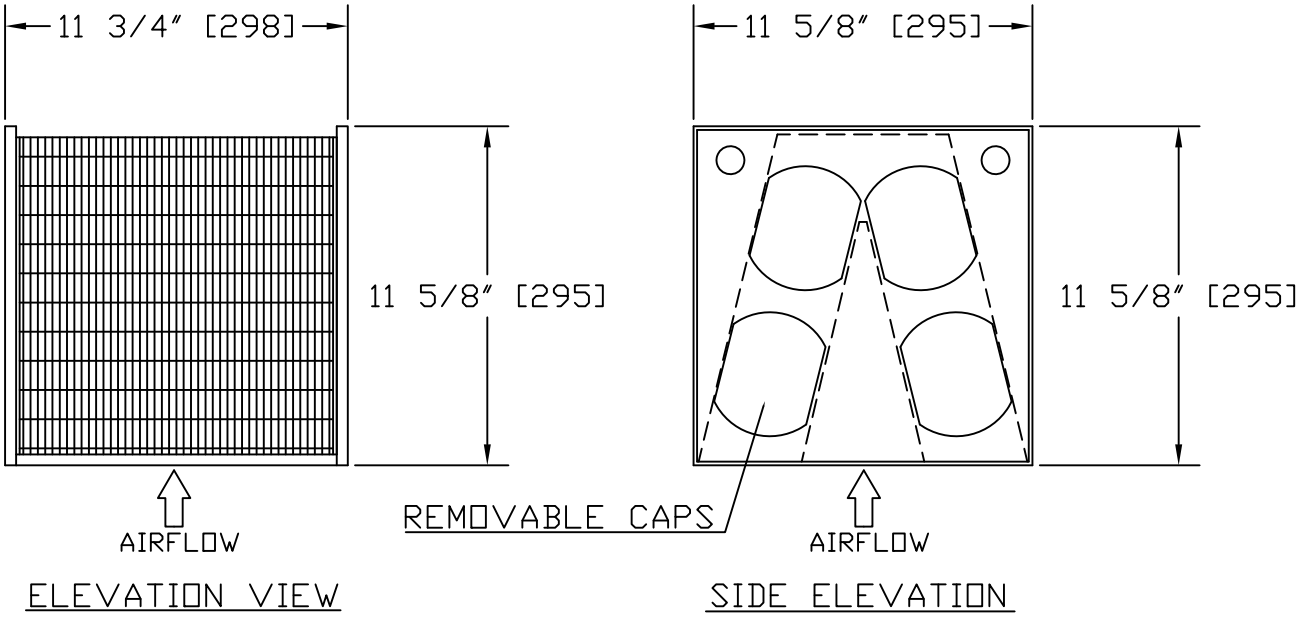


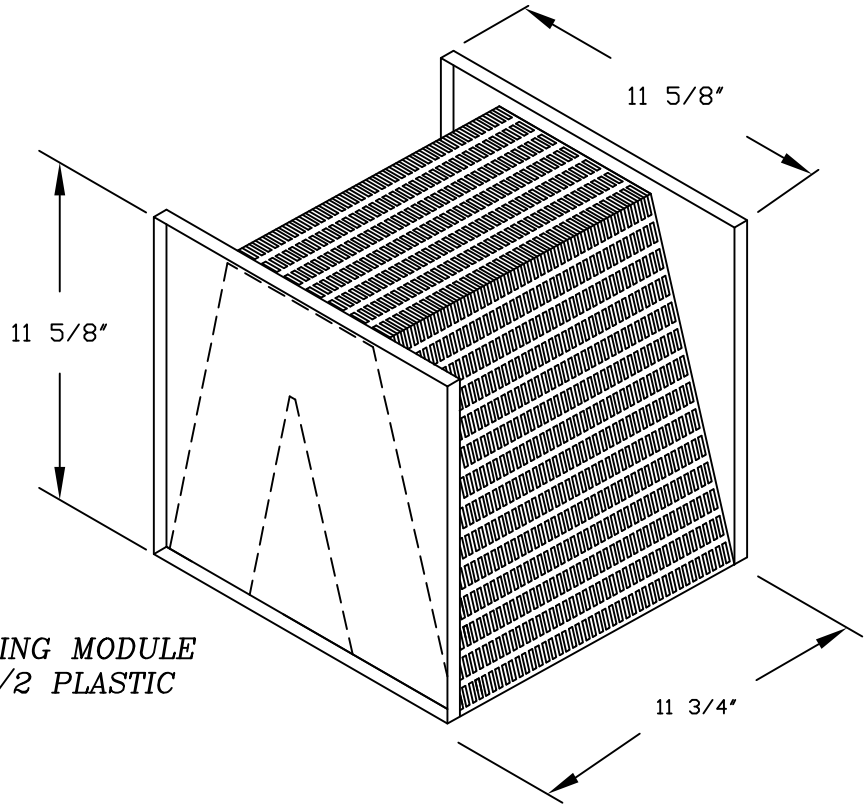


*MEDIA HOLDING MODULE*
*MM-12D-1/2 PLASTIC*

| REV | BY: | DESCRIPTION | DATE |
|---|---|---|---|
| | | | |

CLIENT: N/A

CLIENT REF. NO.: N/A

C.A. REF. NO.:

REPRESENTATIVE:

PROJECT:

CIRCUL-AIRE
USA CANADA

DESCRIPTION:

*MODEL NO.: MEDIA HOLDING MODULE*
*MM-12D-1/2 PLASTIC*

| ENGINEER: CLIENT'S | | JOB # | BY: LC. | DATE: 13/AUG/2013 | DWG NO.: MM12D1/2PLAS | REV. NO.: 0 |
|---|---|---|---|---|---|---|